REV.	ECN NO.	MODIFY MATTER	DATE	APPROVED
A		RELEASE TO PRODUCTION		

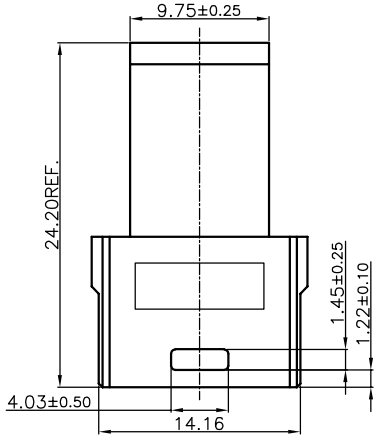

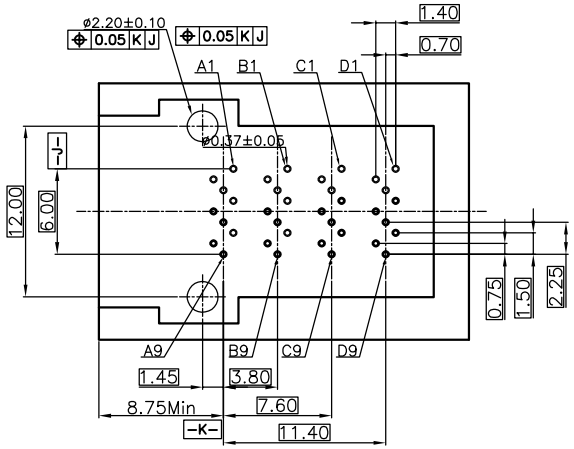

REFERENCE PANEL CUT OUT DIMENSION

NOTE:
1. MATERIAL:
   1.1. HOUSING & PPCA: HIGH TEMPERATURE THERMOPLASTIC, UL94V-0, HF,COLOR: BLACK
   1.2. CONTACT: COPPER ALLOY
2. FINISH:
   2.1. TERIMINAL:
      15u" Au PLATING ON CONTACT AREA,
      80u" TIN PLATING ON SOLDER AREA,
      50u" NICKEL UNDERPLATING ALL OVER.
3. Rating:
   A. Current rating: 0.5 A
   B. Voltage rating: 30V DC
   C. Operating Temperature: -20iãC to +85iãC
   D. Storage Temperature: -20iãC to +85iãC
4.Electrical:
   The following requirement applies to both the power and signal contacts:
   4-1. Impedance: 100 ± 15mOhms Max.
   4-2. Dielectric Withstanding voltage:300Vdc at sea Level.
   4-3. Insulation resistance:1000 MOhms Min Initial.
5. Mechanical:
   5-1. Insertion force: 100N Max.
   5-2. Removal force: 50N Max.

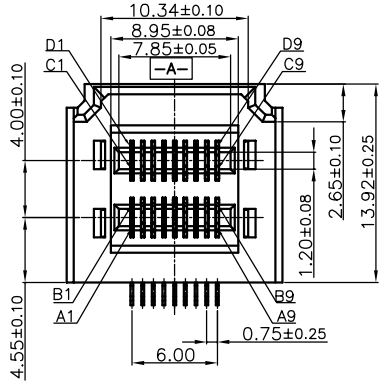

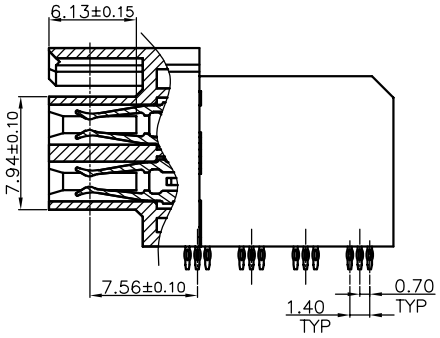

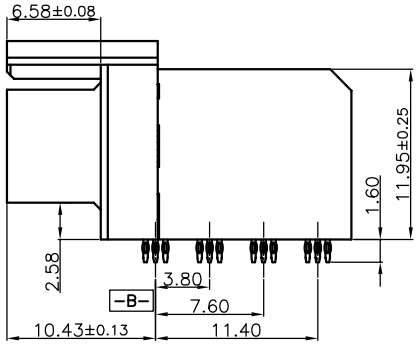

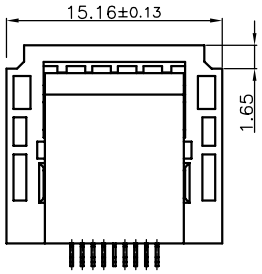

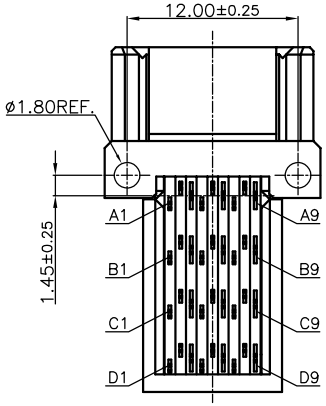

Pin#	Signal	Pin#	Signal	Pin#	Signal	Pin#	Signal
A1	SB7	B1	SB3	C1	SB4	D1	SB5
A2	SB0	B2	SB1	C2	SB2	D2	SB6
A3	GND	B3	GND	C3	GND	D3	GND
A4	Rx1+	B4	Rx0+	C4	Tx1+	D4	Tx0+
A5	Rx1-	B5	Rx0-	C5	Tx1-	D5	Tx0-
A6	GND	B6	GND	C6	GND	D6	GND
A7	Rx3+	B7	Rx2+	C7	Tx3+	D7	Tx2+
A8	Rx3-	B8	Rx2-	C8	Tx3-	D8	Tx2-
A9	GND	B9	GND	C9	GND	D9	GND

NO.	DESCRIPTION	MATERIAL	COLOR	REMARK
3	Cover	High Temp	Black	UL 94V-0
2	Terminal	Pho.Bronze		Gold/Tin Plated
1	Housing Insermoding	High Temp	Black	UL 94V-0

TOLERANCES UNLESS OTHERWISE SPECIFIED:
X. ---
X.X ± 0.38
X.XX ± 0.25
X.XXX ± 0.10
Angle ±1°

THESE DRAWING AND SPCIFICATION ARE THE PROPERTY OF Shenzhen Dongfangyuye ELECTRONIC CO., LTD.. SHALL NOT BE REPRODUCED.

COSTOMER COPY

深圳市东方御业科技有限公司
WWW.DFYYCONN.COM TEL:0755-27155560

DRAWN: CHENLEI	2017/09/10	TITAL: MINI SAS INTERNAL VERTICAL DIP+KINKED COMBO TYPE (RoHS)
CHECKED: CHENLEI	2017/09/10	PART NO: EAST-MSAS36PA1BR
APPROVED: QINKAIXING	2017/09/10	UNIT: mm / SCALE: N/A / SHEEL.: 1:1 / REV.

www.dfyyconn.com